MALE END VIEW	WIRING DIAGRAM	VALVE END VIEW

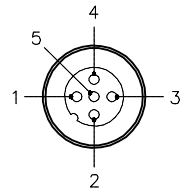

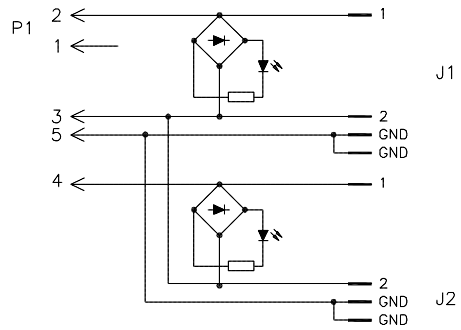

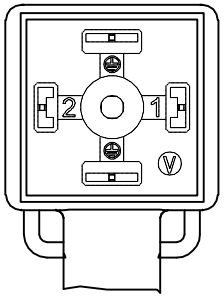

SPECIFICATIONS

CONTACT CARRIER MATERIAL	NYLON or TPU
CONTACT MATERIAL/PLATING	BRASS/SILVER (J1,J2), BRASS/GOLD (P1)
MOLDED HEAD MATERIAL/COLOR	TPU/TRANSLUCENT BLACK (J1,J2) YELLOW (VB2,P1)
COUPLING NUT MATERIAL/PLATING	BRASS/NICKEL (P1)
RATED CURRENT [A]	4.0 A
RATED VOLTAGE [V]	24–48 V
OUTER JACKET MATERIAL/COLOR	PVC/GRAY
CONDUCTOR INSULATION MATERIAL	PVC
NUMBER OF CONDUCTORS [AWG]	4x22 AWG (P1); 3x18 AWG (J1,J2)
TEMPERATURE RANGE	−40°C to +105°C (−40°F to +221°F)
PROTECTION CLASS	MEETS NEMA 1,3,4,6P AND IEC IP67

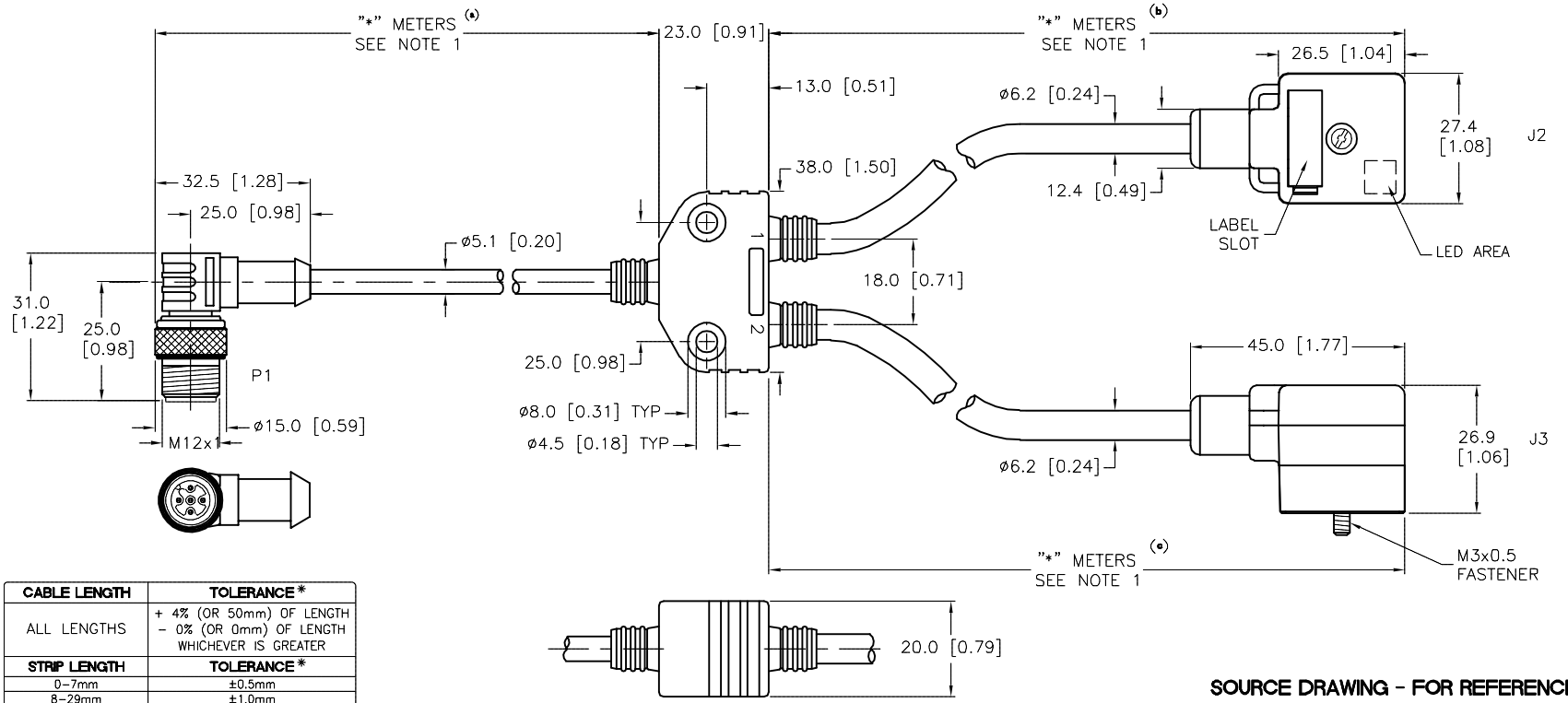

CABLE LENGTH	TOLERANCE *
ALL LENGTHS	+ 4% (OR 50mm) OF LENGTH − 0% (OR 0mm) OF LENGTH WHICHEVER IS GREATER
STRIP LENGTH	**TOLERANCE ***
0–7mm	±0.5mm
8–29mm	±1.0mm
30–49mm	±2.0mm
50–69mm	±3.0mm
70–100mm	±4.0mm
OVER 100mm	±5.0mm
* UNLESS OTHERWISE SPECIFIED	

SOURCE DRAWING - FOR REFERENCE ONLY

NOTES:

1. "*" INDICATES CABLE LENGTH IN METERS. CONTACT TURCK TO ORDER SPECIFIC LENGTHS.

2. "/SV" DESIGNATES SPECIAL PACKAGING FOR VENDING MACHINES.

REV	DESCRIPTION	BY	DATE	ECO NO.
D	UPDATE MALE COUPLING NUT	NF	04/18/18	56902

RELATED DOCUMENTS
1.
2.
3.
4.

3RD ANGLE PROJECTION

THIS DRAWING IS CONFIDENTIAL AND THE PROPERTY OF TURCK INC. USE OF THIS DOCUMENT WITHOUT WRITTEN PERMISSION IS PROHIBITED.

TURCK

3000 CAMPUS DRIVE
MINNEAPOLIS, MN 55441
1-800-544-7769
(763) 553-7300
(763) 553-0708 fax
www.turck.us

MATERIAL: SEE SPECIFICATIONS

FINISH: SEE SPECIFICATIONS

ALL DIMENSIONS DISPLAYED ON THIS DRAWING ARE FOR REFERENCE ONLY

CONTACT TURCK FOR MORE INFORMATION

DRFT: RWC | DATE: 01/16/08
APVD: | SCALE: 1=1.5

UNIT OF MEASUREMENT
MILLIMETER [INCH]
DO NOT SCALE THIS DRAWING

DESCRIPTION: VB2-WS4.5T-*/2VAS22-B653-*/*/SV
(a) (b) (c)

IDENTIFICATION NO.:

REV: D

FILE: 777017032 | SHEET 1 OF 1

Approved 04/27/2018, work order #162155 by J.S.