S90

Extended range of compact photoelectric sensors in a metal housing

- Background suppression and polarized retroreflective
- Class 1 LASER models for long distance detection
- Contrast and UV Luminescence sensors
- Industrial IP67 metal housing
- Standard 4-wire NO-NC NPN or PNP output

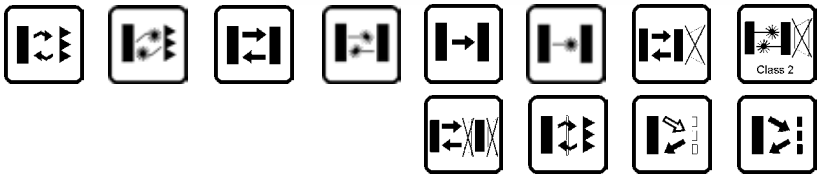

APPLICATIONS

-Processing and Packaging machinery
-Conveyor lines, material handling
-Automotive assembling lines
-Automated warehousing

S90		
Through beam		0...20 m 0...60 m (class 1 LASER)
Polarized retroreflective		0...3,2 m (coaxial) 0,1...6,5 m 0,1...20 m (class 1 LASER)
Retroreflective for transparent (on R2 reflector)		0...1,7 m (coaxial)
Diffuse proximity		short 0,01...1 m long 0,05...2 m 0...600 mm (class 1 LASER)
Background suppression		70...200 mm 50...100 mm (class 1 LASER)
Foreground suppression		70...200 mm
Luminescence		0...40 mm
Contrast		19 ± 2 mm
Power supply	Vdc	10...30 V
	Vac	
	Vac/dc	
Output	PNP	▪
	NPN	▪
	NPN/PNP	
	relay	
	other	
Connection	cable	
	connector	▪
	pig-tail	
Approximate dimensions (mm)		15x50x41
Housing material		Zama
Mechanical protection		IP67

TECHNICAL DATA	
Power supply	10 ... 30 Vdc (limit values)
Ripple	2 Vpp max.
Consumption (output current excluded)	35 mA max. 35 mA max. (mod. S90...B01/B51/C01/C11/F01/T51) 30 mA max. (mod. S90...W08/U08) 50 mA max. (mod. S90...M08/N03) 60 mA max. (Laser mod. S90...M08)
Light emission	red LED 660 nm (mod. S90...B01/B51/C01/T51) red LED 670 nm (mod. S90...M08) IR LED 880 nm (mod. S90...C11/G00) white LED 400-700 nm (mod. S90...W08) UV LED 370 nm (mod. S90...U08) red Laser 650 nm
Setting	sensivity trimmer (mod. S90...B01/B51/C01/C11/F01/T51) SET push-button (mod. S90...M08/N03/W08/U08)
Operating mode	LIGHT mode on N.O. output/DARK mode on N.C. output (mod. S90...C01) DARK mode on N.O. output/LIGHT mode on N.C. output (mod. S90...B01/F01) LIGHT mode with EASY TOUCH™/automatic with fine detection (mod. S90...M08/N03/U08) DARK mode with EASY TOUCH/automatic with fine detection (mod. S90...W08)
Indicators	yellow OUTPUT LED (excl. mod. S90...G00) green STABILITY LED (mod. S90...B01/B51/C01/C11/F01), POWER LED (mod. S90...G00, Laser mod. S90...B01/C01/F01/G00) green/red READY/ERROR LED (mod. S90...M08/N03/W08/U08) yellow/orange OUTPUT LED, green/red LASER ON/ERROR LED (Laser mod. S90...M08)
Output	PNP or NPN; NO and NC (mod. S90...B01/C01/F01/T51)
Output current	100 mA max.
Saturation voltage	2 V max.
Response time	0,5 ms (mod. S90...B01/B51/T51) 1 ms (mod. S90...C01/C11/F01) 100 µs (mod. S90...W08) 500 µs max. (mod. S90...M08/N03) 250 µs (mod. S90...U08, Laser mod. S90...B01/C01) 333 µs (Laser mod. S90...F01)
Switching frequency	1 kHz (mod. S90...B01/B51/T51) 500 Hz (mod. S90...C01/C11/F01) 5 kHz (mod. S90...W08) 1 kHz (mod. S90...M08/N03) 2 kHz (mod. S90...U08, Laser mod. S90...B01/C01) 1,5 kHz (Laser mod. S90...F01)
Connection	M12 4-pole connector
Dielectric strength	500 Vac, 1 min between electronics and housing
Insulating resistance	>20 MΩ, 500 Vdc between electronics and housing
Electrical protection	class 2
Mechanical protection	IP67 (type 1 enclosure)
Ambient light rejection	according to EN 60947-5-2
Vibrations	0,5 mm amplitude, 10 ... 55 Hz frequency, for every axis (EN60068-2-6)
Shock resistance	11 ms (30 G) 6 shock for every axis (EN60068-2-27)
Housing material	ZAMA
Lens material	PMMA window and polycarbonate lens (mod. S90...B01/C01/C11/F01/G00/M08/N03) glass window and lens (mod. S90...B51/T51) glass window skewed anti-reflection and glass lens (mod. S90...W08/U08) PMMA window, polycarbonate and glass lens (Laser mod. S90...M08)
Operating temperature	-25 ... 55 °C (mod. S90...B01/B51/C01/C11/F01/G00) -10 ... 55 °C (mod. S90...M08/N03/W08/U08) -10 ... 50 °C (Laser mod.)
Storage temperature	-25 ... 70 °C (mod. S90...B01/B51/C01/C11/F01/G00, Laser mod. S90...B01/C01/F01/G00) -20 ... 70 °C (mod. S90...M08/N03/W08/U08, Laser mod. S90...M08)
Weight	77 g

CONNECTIONS

M12 CONNECTOR

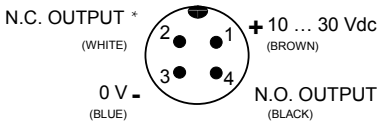

Through beam emitter

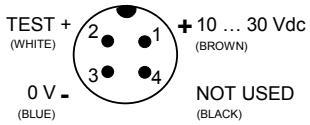

* N.C. OUTPUT (mod. S90...B, C, F, T), REMOTE (mod. S90...M, N, U, W)

INDICATORS AND SETTINGS

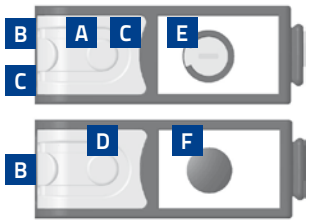

* Teach-in push-button for setting.
EASYtouch™ provides two setting modes: standard or fine.
Please refer to instructions manual for operating details.

- **A** STABILITY LED
- **B** Output status LED
- **C** POWER ON LED
- **D** READY/ERROR LED
- **E** Trimmer
- **F** SET push-button *
- **G** M12 connector output, orientable in 4 positions

DIMENSIONS

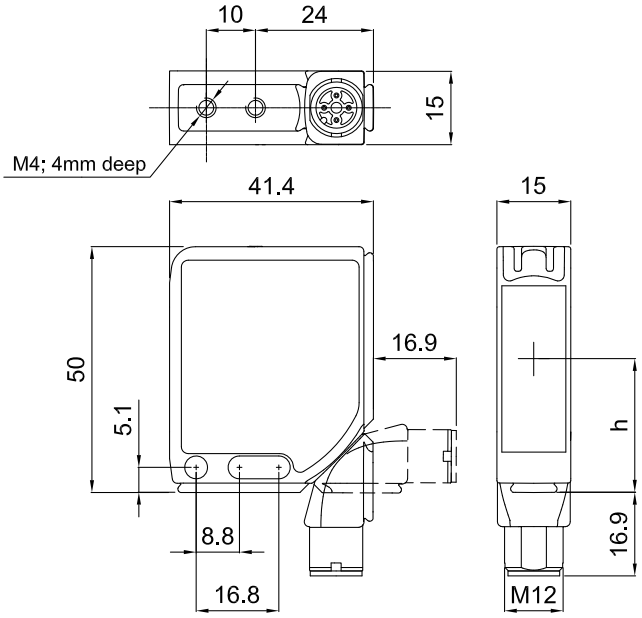

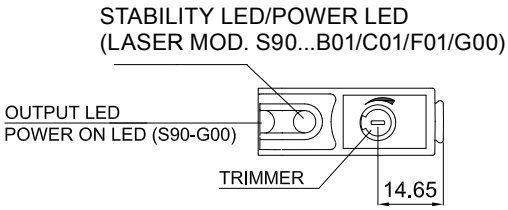

VERSION	h
B01 C01 C11 F01 G00	26.7
M08 N03	27.2
B51 T51 W08 U08	29.7

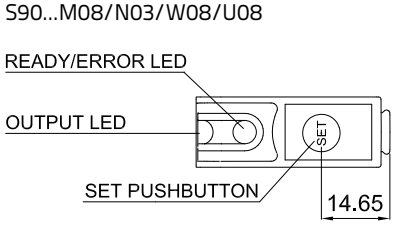

mm

DETECTION DIAGRAMS

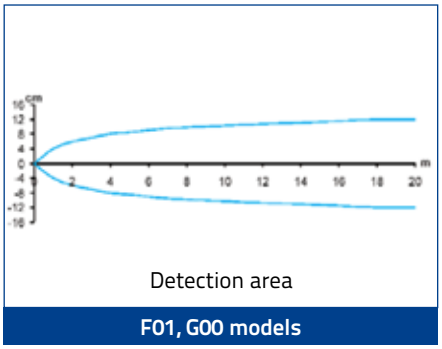

Detection area

F01, G00 models

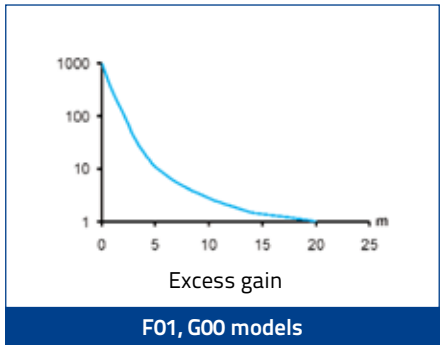

Excess gain

F01, G00 models

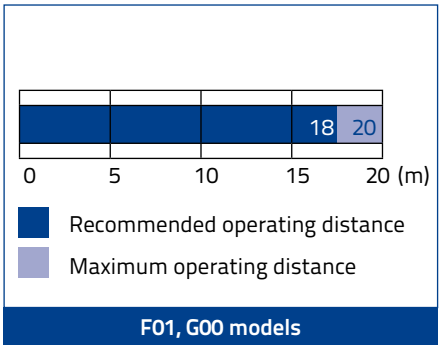

F01, G00 models

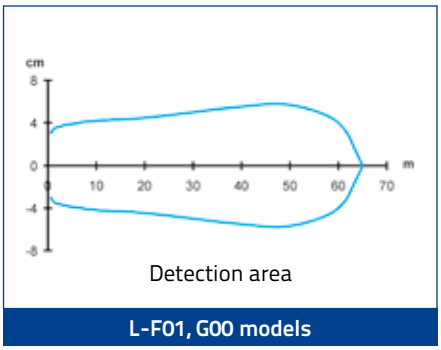

Detection area

L-F01, G00 models

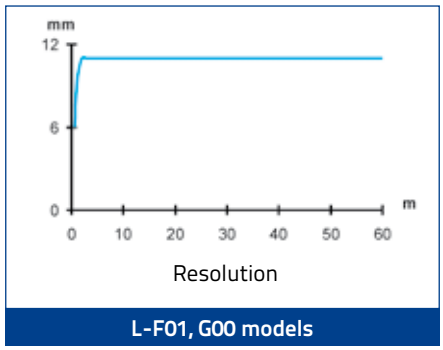

Resolution

L-F01, G00 models

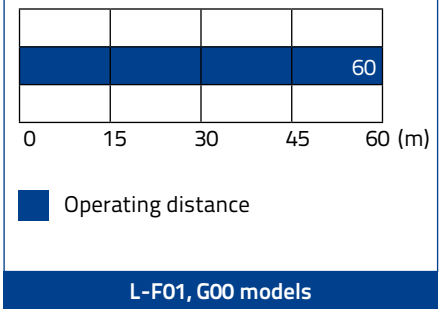

L-F01, G00 models

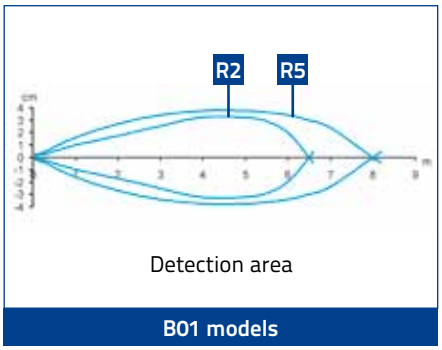

Detection area

B01 models

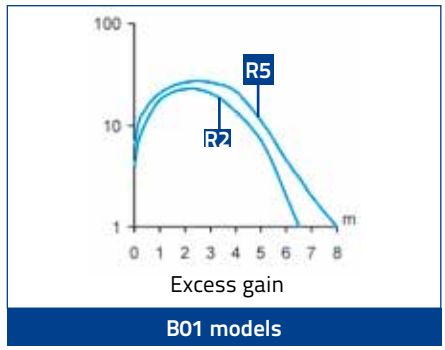

Excess gain

B01 models

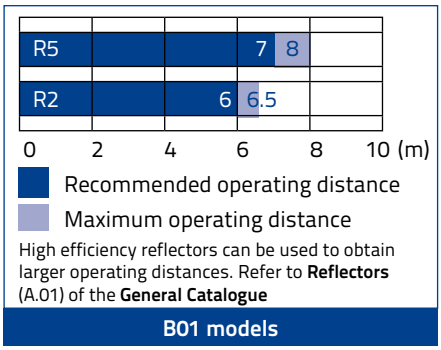

High efficiency reflectors can be used to obtain larger operating distances. Refer to **Reflectors** (A.01) of the **General Catalogue**

B01 models

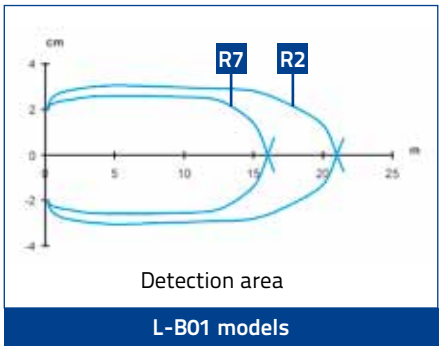

Detection area

L-B01 models

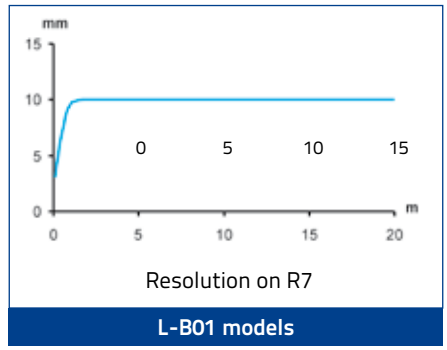

Resolution on R7

L-B01 models

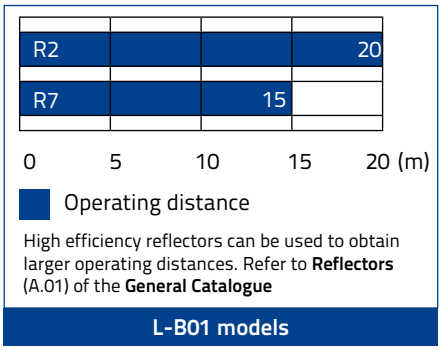

High efficiency reflectors can be used to obtain larger operating distances. Refer to **Reflectors** (A.01) of the **General Catalogue**

L-B01 models

DETECTION DIAGRAMS

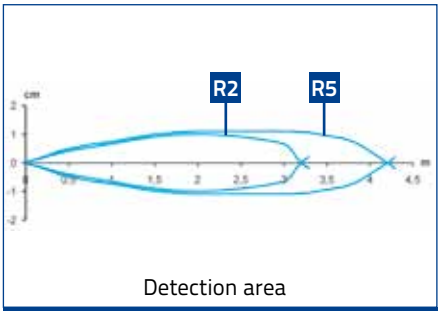

Detection area

B51 models

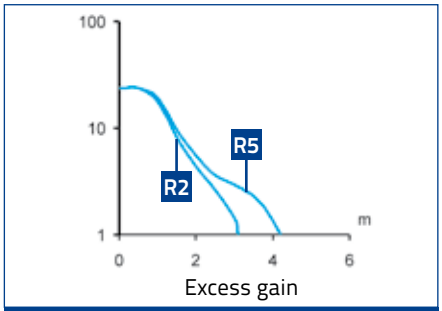

Excess gain

B51 models

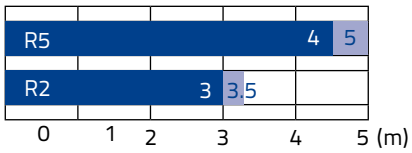

Recommended operating distance

Maximum operating distance

High efficiency reflectors can be used to obtain larger operating distances. Refer to **Reflectors** (A.01) of the **General Catalogue**

B51 models

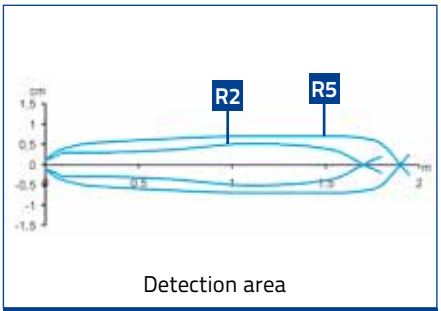

Detection area

T51 models

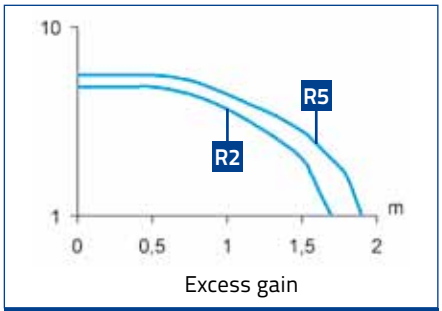

Excess gain

T51 models

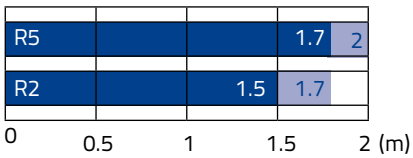

Recommended operating distance

Maximum operating distance

T51 models

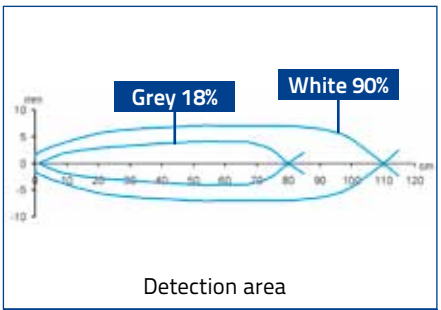

Detection area

C01 models

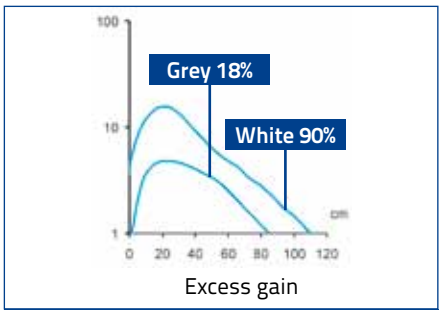

Excess gain

C01 models

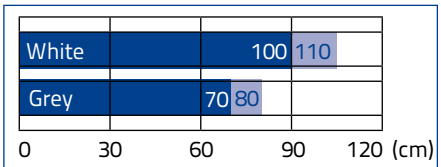

Recommended operating distance

Maximum operating distance

C01 models

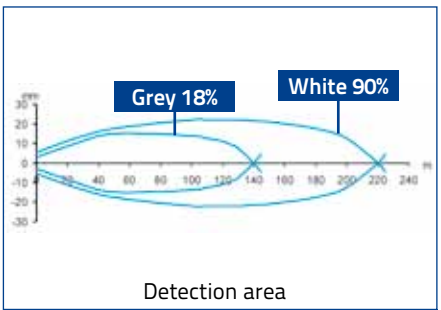

Detection area

C11 models

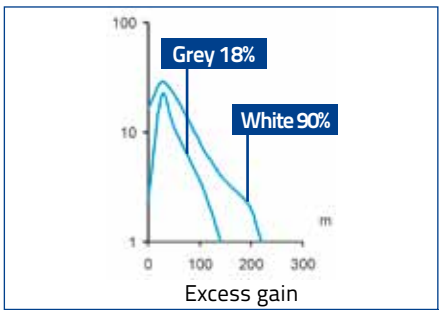

Excess gain

C11 models

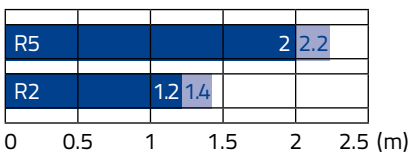

Recommended operating distance

Maximum operating distance

C11 models

DETECTION DIAGRAMS

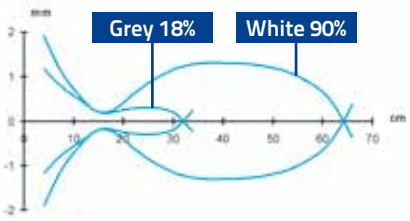

Detection area

L-C01 models

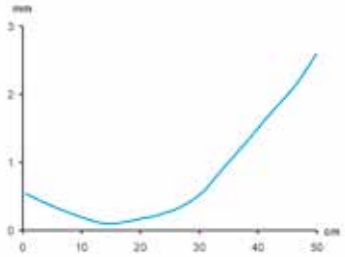

Resolution

L-C01 models

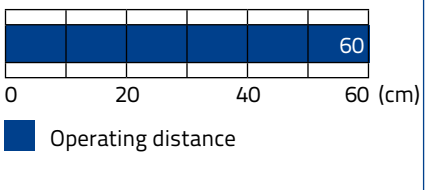

L-C01 models

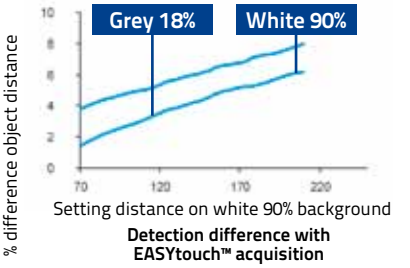

M08 models

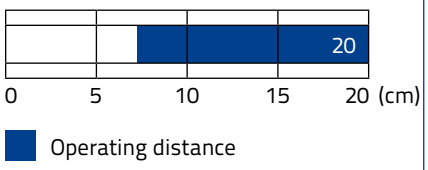

M08 models

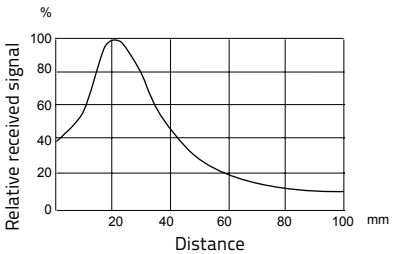

W models

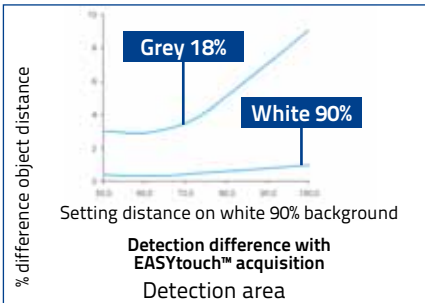

L-M08 models

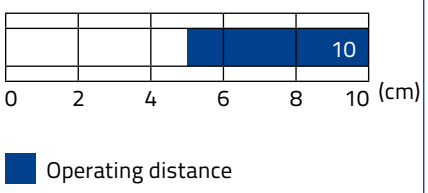

L-M08 models

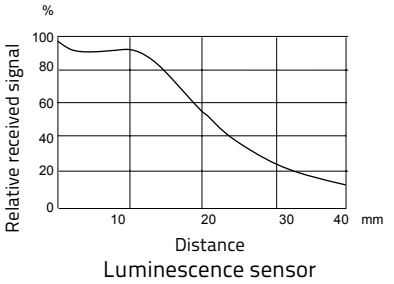

U models

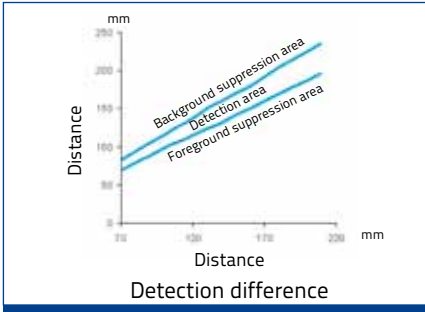

N03 models

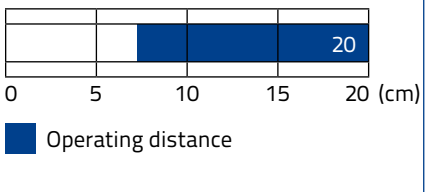

N03 models

MODEL SELECTION AND ORDER INFORMATION

OPTIC FUNCTION	EMISSION	SETTING	OUTPUT	MODEL	ORDER No.
Polarized retroreflective	LASER	Trimmer	NPN	S90-ML-5-B01-NN	956301260
			PNP	S90-ML-5-B01-PP	956301090
	LED	Trimmer	NPN	S90-MA-5-B01-NN	956301160
			PNP	S90-MA-5-B01-PP	956301000
Coaxial polarized retroreflective	LED	Trimmer	NPN	S90-MA-5-B51-NN	956301170
			PNP	S90-MA-5-B51-PP	956301030
Short diffuse proximity	LASER	Trimmer	NPN	S90-ML-5-C01-NN	956301270
			PNP	S90-ML-5-C01-PP	956301100
	LED	Trimmer	NPN	S90-MA-5-C01-NN	956301190
			PNP	S90-MA-5-C01-PP	956301010
Long diffuse proximity	LED	Trimmer	NPN	S90-MA-5-C11-NN	956301200
			PNP	S90-MA-5-C11-PP	956301020
Through beam receiver	LASER	Trimmer	NPN	S90-ML-5-F01-NN	956301280
			PNP	S90-ML-5-F01-PP	956301110
	LED	Trimmer	NPN	S90-MA-5-F01-NN	956301210
			PNP	S90-MA-5-F01-PP	956301050
Through beam emitter	LASER	-	-	S90-ML-5-G00-XG	956301120
	LED	-	-	S90-MA-5-G00-XG	956301060
Background suppression	LASER	Teach-in, delay-off, remote	NPN	S90-ML-5-M08-NH	956301290
			PNP	S90-ML-5-M08-PH	956301130
	LED	Teach-in, delay-off, remote	NPN	S90-MA-5-M08-NH	956301220
			PNP	S90-MA-5-M08-PH	956301070
Background and foreground suppression	LED	Teach-in, remote	NPN	S90-MA-5-N03-NH	956301230
			PNP	S90-MA-5-N03-PH	956301080
Retroreflective for transparent	LED	Trimmer	NPN	S90-MA-5-T51-NN	956301180
			PNP	S90-MA-5-T51-PP	956301040
Luminescence	LED	Teach-in, delay-off, remote	NPN	S90-MA-5-U08-NH	956301240
			PNP	S90-MA-5-U08-PH	956301140
Contrast	LED	Teach-in, delay-off, remote	NPN	S90-MA-5-W08-NH	956301250
			PNP	S90-MA-5-W08-PH	956301150

ACCESSORIES

ST-5018

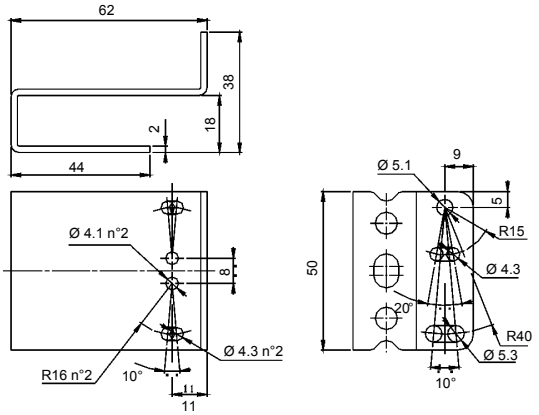

ST-5019

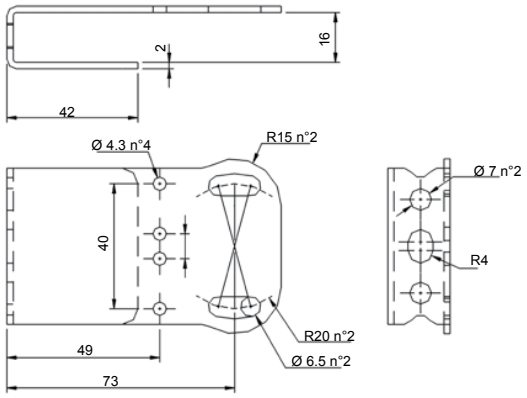

JOINT-60

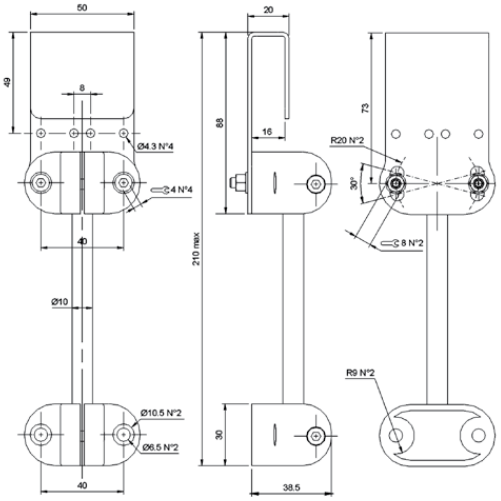

ST-5020

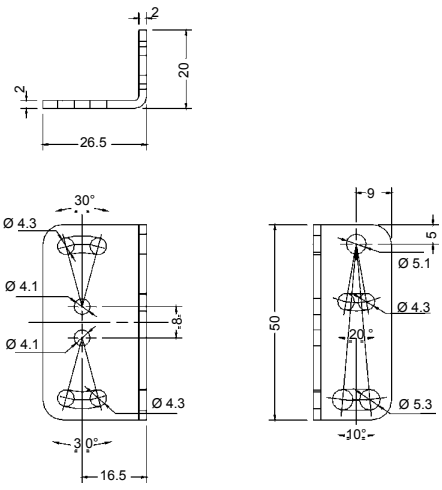

ST-5021

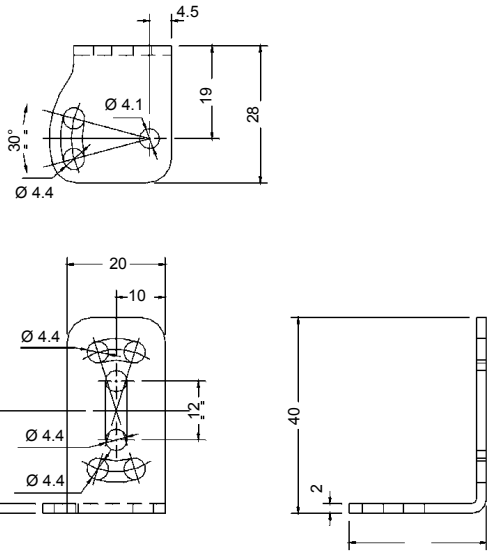

ST-504

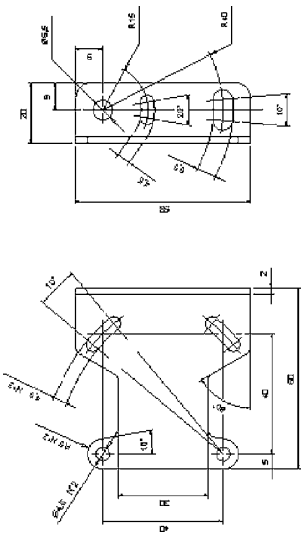

ST-5053

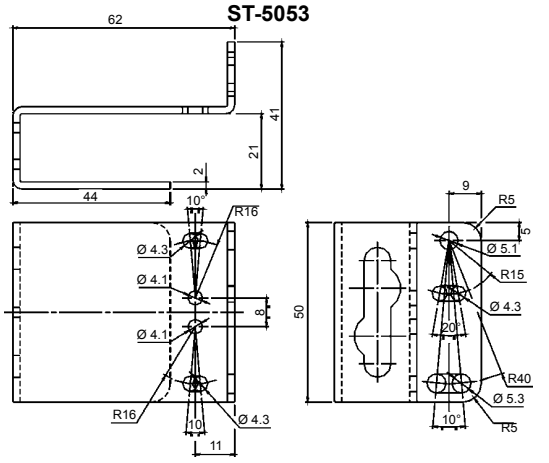

ST-5054

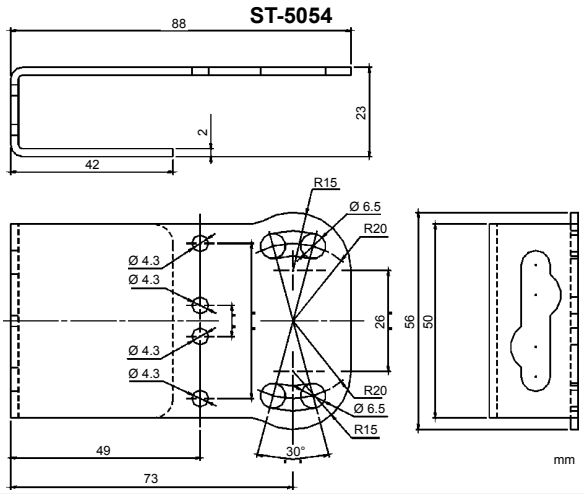

ST-5041

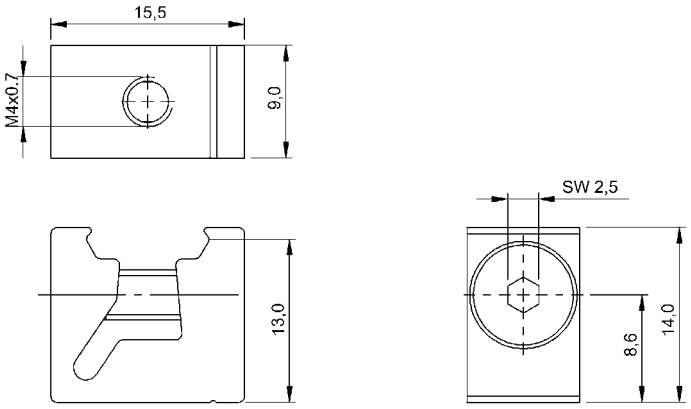

ST-5042

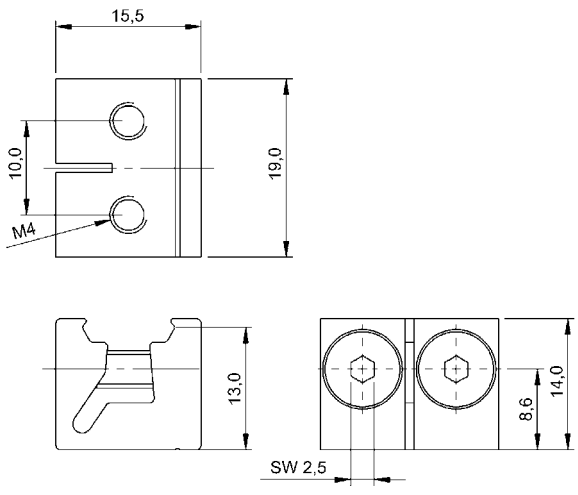

MODEL	DESCRIPTION	ORDER No.
ST-5018	protective bracket	95ACC5310
ST-5019	protective bracket	95ACC5320
ST-5020	mounting bracket	95ACC5330
ST-5021	mounting bracket	95ACC5340
ST-504	mounting bracket	95ACC2820
ST-5053	protective bracket	95ACC2410
ST-5054	protective bracket	95ACC2420
ST-5041	short dove-tail bracket	95ACC2300
ST-5042	long dove-tail bracket	95ACC2310
JOINT -60	protective bracket with jointed support	95ACC 5350

CABLES

TYPE	DESCRIPTION	LENGTH	MODEL	ORDER No.
Axial M12 Connector	4-pole, grey, P.V.C.	3 m	CS-A1-02-G-03	95A251380
		5 m	CS-A1-02-G-05	95A251270
		7 m	CS-A1-02-G-07	95A251280
		10 m	CS-A1-02-G-10	95A251390
	4-pole, P.U.R.	2 m	CS-A1-02-R-02	95A251540
		5 m	CS-A1-02-R-05	95A251560
Radial M12 Connector	4-pole, grey, P.V.C.	3 m	CS-A2-02-G-03	95A251360
		5 m	CS-A2-02-G-05	95A251240
		7 m	CS-A2-02-G-07	95A251245
		10 m	CS-A2-02-G-10	95A251260
	4-pole, P.U.R.	2 m	CS-A2-02-R-02	95A251550
		5 m	CS-A2-02-R-05	95A251570
Radial M12 Connector with LED (for PNP N.O. sensors)	4-pole, grey, P.V.C.	3 m	CS-A2-12-G-03	95A251400
		5 m	CS-A2-12-G-05	95A251350
		10 m	CS-A2-12-G-10	95A251370
Axial M12 Connector	4-pole, shielded, black, P.V.C.	3 m	CV-A1-22-B-03	95ACC1480
		5 m	CV-A1-22-B-05	95ACC1490
		10 m	CV-A1-22-B-10	95ACC1500
		15 m	CV-A1-22-B-15	95ACC2070
		25 m	CV-A1-22-B-25	95ACC2090
Radial M12 Connector		3 m	CV-A2-22-B-03	95ACC1540
		5 m	CV-A2-22-B-05	95ACC1550
		10 m	CV-A2-22-B-10	95ACC1560
Axial M12 Connector	4-pole, U.L., black, P.V.C.	3 m	CS-A1-02-U-03	95ASE1120
		5 m	CS-A1-02-U-05	95ASE1130
		10 m	CS-A1-02-U-10	95ASE1140
		15 m	CS-A1-02-U-15	95ASE1150
		25 m	CS-A1-02-U-25	95ASE1160
	4-pole, black	Connector- not cabled	CS-A1-02-B-NC	G5085002
Radial M12 Connector		Connector- not cabled	CS-A2-02-B-NC	G5085003

DATALOGIC
S90-MA-5-T51-PP
OPTIC AXIS