JIULONG MOTOR

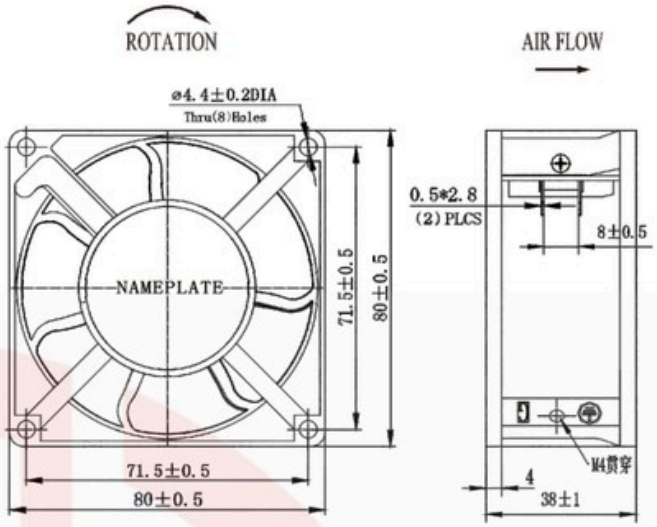

尺寸 Size: 80mm × 80mm × 38mm
风量 Airflow: 22–28CFM
噪音 Noise: 26–32dB(A)
风叶 Impeller Material: PBT UL94–V0 Reinforced Plastic
外框 Frame: Aluminum Alloy
端子 Terminals: 0.5mm
引线 Lead Wire: AWG#22 UL 1569(Optional)
马达 Motor: Shaded Pole Induction Motor
温度范围 Operating Temperature: –10℃~+65℃

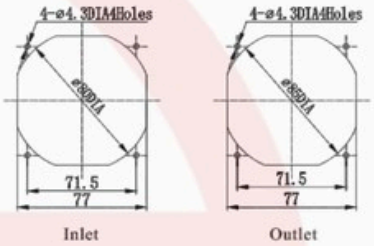

AC轴流风机 AC Axial Fan

产品型号 Model	轴承型式 Bearing System	电压 Voltage VAC	频率 Freq. Hz	电流 Current A	功率 Power W	转速 Speed RPM	噪音 Noise dB(A)	风量 Air Flow CFM	相数 Phase	电容 Capacitor μF/VAC
G8038HA$_1$S	Sleeve	100/125	50/60	0.18/0.13	15/10	2550/3100	28/32	23/28	1	/
G8038HA$_2$S		200/240	50/60	0.08/0.06	12/10	2550/3100	28/32	23/28	1	/
G8038HA$_1$B	Ball	100/125	50/60	0.18/0.13	15/10	2550/3100	28/32	23/28	1	/
G8038HA$_2$B		200/240	50/60	0.08/0.06	12/10	2550/3100	28/32	23/28	1	/
G8038MA$_1$S	Sleeve	100/125	50/60	0.13	9/7	2300/2700	26/30	22/26	1	/
G8038MA$_2$S		200/240	50/60	0.065	7/6	2300/2700	26/30	22/26	1	/
G8038MA$_1$B	Ball	100/125	50/60	0.13	9/7	2300/2700	26/30	22/26	1	/
G8038MA$_2$B		200/240	50/60	0.065	7/6	2300/2700	26/30	22/26	1	/

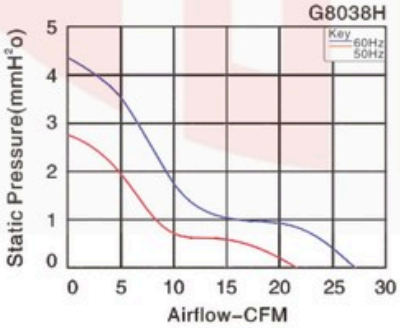

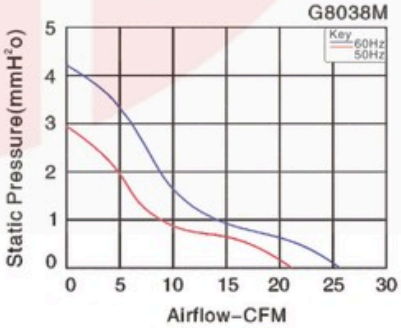

Fan Accessories

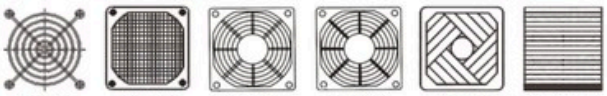

JL80FOR JL80–MF JL71H(B)–A JL80H(B) JL71H(B)–B JL9801.200

本样册仅做选型参考,具体以规格书为准。
This sample book is for reference only. Please refer to the specification for details.
如需特殊电压也可根据洽询提供，本公司保留技术改动权利。
Special voltage may be provided if necessary according to the inquiry. Julong all technical modification rights reserved.